VT-RF-70

Technical Manual

Version 3.6

JDA Systems, Gutenbergstrasse 4,

26632 Ihlow Riepe, Germany

February 2013

1 — Introduction

1.1 General

The VT-RF-70 Receiver Shown With the USB Interface Option

The JDA SystemsVT-RF-70 RF receiver is designed to be used for the reception of telemetry or video RF transmissions. The received signals are taken in at an intermediate frequency (IF) centered on 70MHz and gives a base band wideband signal as the output (video output). The design draws heavily on the recent developments in cell phone technology, and unlike almost all other present designs is unique and original. This results in a unit which has extremely high performance but does not consume excessive power nor generate excessive heat. At 700mA maximum and 5V the unit can be powered via the USB from any computer with a suitable high capacity output or separately from an external power supply when fitted with the Ethernet interface option. The VT-RF-70 is also unique as it is available with a standard USB interface, from which is draws both control and power, or on computers where this is not possible (some laptops which do not provide a high power capability) the 5V may be supplied separately via the on board 9 pin connector. The receiver offers the option to be used locally, like a traditional receiver, or remotely even over very long links which can improve the total system flexibility and performance.

1.2 Specifications

Table 1–1. Mechanical Specifications	
Form Factors	Without Case 104Wx70Dx16H mm With Case 120Wx75Dx50H mm
Weight	300g

Power Dissipation	Maximum 3.5 watts

Table 1–2. Receiver Specifications	
Frequency Ranges	1435.5-1540.5 MHz & 1700-1850 MHz & 2185-2480 MHz
Modulation Type	FM
Pre-Detect (2nd IF) Filters	10 MHz, 4MHz, 2MHz, 1MHz
Post-Detect (Video) Filters	5MHz, PAL Deemphasis, NTSC Deemphasis and programmable from 0.23 to 5.4 MHz
Post-Detect Combiner	Bandwidth 20MHz
Output Data Rate	20 kbps to 20.0 Mbps (NRZ codes) 10 kbps to 10.0 Mbps (all other codes)
Noise Figure	Less than 5db
Multi Function Connector	9 Pin Sub-D Female
Combiner Connector	SMA Female
IF Input Connector	SMA Female
Video Output Connector	SMA female
Control Interface	Ethnernet 100 MBit or USB 2.0 compatible with USB 1.1

Table 1–3. Environmental Specifications	
Temperature (Operating)	-30 to 65 ^{o}C
Temperature (Non-Operating)	-40 to +80 ^{o}C
Humidity (Operating)	0% to 95% Non-Condensing
Humidity (Non-Operating)	The packaging should prevent contact with moisture and contaminants
Special Handling	Standard ESD methods required

2 — Installation

2.1 Computer Interface

The receiver requires no PCI slots nor I/O space or memory space. ***No switches are used as all the settings are determined by the system.***

The receiver conforms to wither Ethernet 100 MBit or USB 2.0and is backward compatible with USB 1.1.

Ethernet is well understood and will not be discussed here.

The USB bus is a [Differential] Bi-directional serial interface cable bus. Differential NRZI data is transmitted Isochronous or Asynchronous between devices. Data is transferred at three different rates over a maximum cable length of 4 meters ~ over 4 wires, 2 of which carry data on a balanced twisted pair.

USB may operate at any speed from 10kbps to 400Mbps in one of three speed modes. A Slow-Speed mode of 10kbps to 100kbps is used for devices such as a USB keyboard or USB mouse.

Full-Speed mode is used by most devices and allows a transfer rate of 500kbps to 10Mbps. High-Speed mode [defined by USB 2.0] allows rates of up to 480Mbps, with a speed range of 25Mbps to 400Mbps.

Transmission at the High-Speed mode requires the addition of 45 ohm termination resistors between each data line and ground. Operation at Full-Speed mode is 2.8 volts [High] to 0.3 volts [Low]. Operation at High-Speed mode is at 400mV +/-10% [High] to 0V +/- 10mV {Low]. Cable impedance for both modes is 90 ohms +/- 15% (differential).

Cables and connectors are fully defined. USB defines 2 types of hardware, Hubs and Functions. Up to 127 devices may be connected together in a tiered Star topology, the limiting factor being 7 address bits. The physical wire segments are point-to-point between a Host, Hub, or Function. The system may only have one Host, which connects to a Hub. A USB Hub may connect to another Hub or to a USB Function. Each layer transition from Hub to Hub represents another Tier. USB Hubs allow connection to a USB bus, while USB Functions are the devices which perform some function.

2.2 Physical Installation

The receiver depending on the interface version ordered can be connected to any Ethernet 100 Mbit or USB computer connector or hub connector that is capable of supplying a maximum of 700mA as a supply power. The USB drivers supplied are for Microsoft Windows XP.

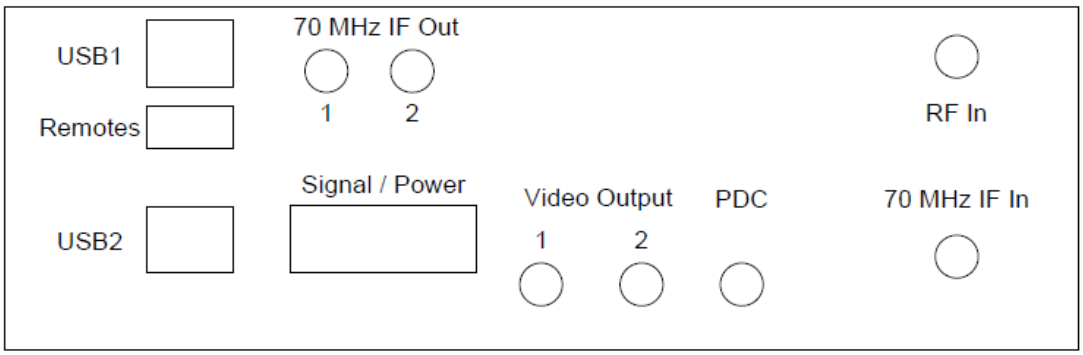

VT-RF-70-3 Hybrid Receiver
Downconverter/Receiver Front Panel Engraving

The integrated RF receiver module consists of two physical parts:

- 70 MHz Down Converter
- 70 MHz IF Receiver

The receiver is capable of receiving analog or digital signals in the L, Upper L, S and NATO bands and outputting these at base band.

These are integrated into a single chassis and used in the PreFlight unit amongst other units. The connectivity for use in these units is shown below.

15 Pin DSub

Pin	**Name**
1	AM
2	AGC
3	Deviation
4	Diversity data IO
5	Optional Power In
6	AM R
7	AGC R
8	GND
9	GND

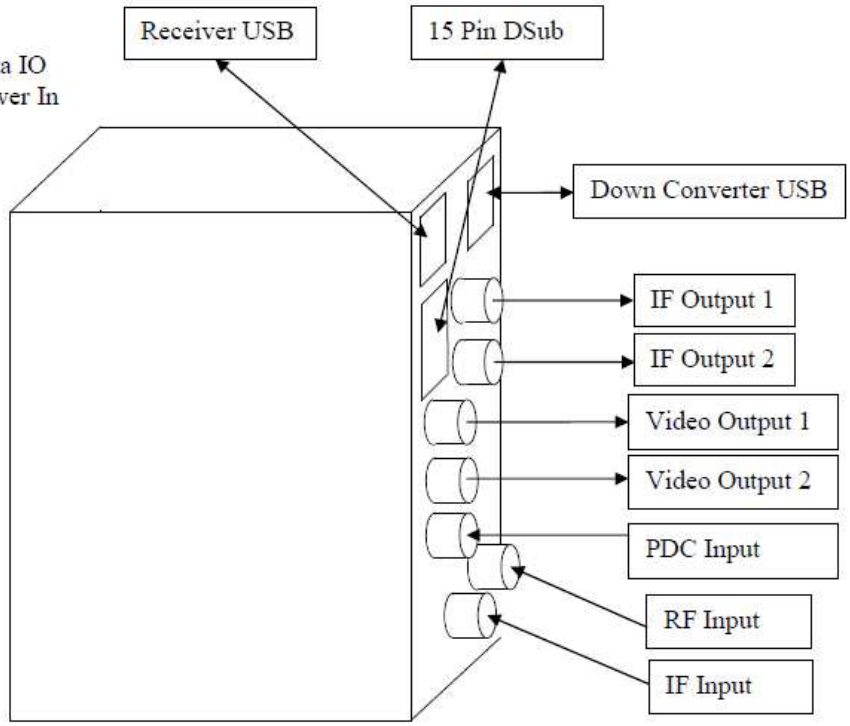

For normal operation connect the RF signal directly from the antenna system to the RF Input. Then connect a cable from either IF Output 1 or RF Output 2 (both present a separately buffered version the same 70MHz IF signal) to IF Input. Once the software is running the received signal, sometimes called the video although this may contain telemetry or video signals, will appear on both Video Output 1 and Video Output 2 which both present the same data but are separately buffered.

When operating with post detect combination an additional cable should be connected from the Video Output 1 or Video Output 2 of the slave receiver (normally receiver 2) to the PDC Input of the master receiver (normally receiver 1). When post detect combination is activated via the operating software then the combined signal will appear on Video Output 1 and Video Output 2 of the master receiver (normally Receiver 1).

2.3 Interface

Five connectors are supplied on the receiver, the first is for Ethernet or USB, the second for IF input, the third for multi function output and power, the fourth for the combiner cross connector and the fifth for the wideband (video) output.

The USB connector when fitted is a standard Type B PCB board connector. The connector allows for the transfer of power and control from the controlling computer.

The IF input is a gold plated SMA female PCB board connector. This connects directly to the IF source, normally a down converter. No external amplification is. If an excessive signal level is applied to the input of the receiver (greater than 20 dbm) it may be necessary to reduce this level by using the input damper on the down converter. The input damper can provide from 0 to 31 db of damping in 1 db steps.

The Video output is a gold plated SMA female PCM board connector. This provides the wideband (video) output signal.

3 — Programming Information

3.1 General

This chapter is targeted to the expert user who will need to know what all the commands do.

The receiver is controlled by a series of ASCII commands, each identified by the first character of the command line. This was done to make interfacing simple regardless of the platform or controller.

3.2 The Ethernet Virtual COM Address

When using the Ethernet version a virtual COM port is available at the Ethernet address allocated to the receiver on Port 4500.

3.3 Locating the Receiver USB COM Address

When using the USB version than as USB components do not have fixed address or IO assignments, at system startup a power-on routine scans the computer for USB interfaces and assigns system resources to them based on the last configuration when the specific combination of USB port, device and any intermediate hubs were used.

Note that although the Ethernet virtual port is fixed, the USB COM port will change every time you connect the receiver to a different USB port on your controlling computer, to make life simple we suggest that you select a USB port for the connection to the receiver and then stick with it.

The following discussion applies to systems using Microsoft Windows XP, and this is the only operating system fully tested with the supplied drivers. Other environments will have system-specific ways to communicate with the USB you will have to consult your operating system documentation to find out how.

This section of the document assumes that this is the first time you will be connecting the receiver to the selected USB port on your controlling computer. The driver for the receiver emulates a standard COM port.

To install the receiver on your system for the first time…

1. Place the supplied Windows XP driver in a known location on you hard drive.

2. Plug the receiver's cable into a free USB port on your computer, taking note of which physical port it is as you will need to always use that port for the receiver connection in the future.

3. When prompted by the operating system for a driver, do not allow the system to search for a driver on the internet. Just select the location on the hard drive where you placed the driver as a known location for the driver search.

4. When prompted allow the driver to install whether or not it is registered with Microsoft.

Your receiver should now be ready for use, we have observed that on some systems it may be necessary at this stage to reboot the system for correct operation.

To locate the receiver COM port used by your system…

1. Select ***Start/Control Panel*** on the Windows desktop.

2. Select ***Performance and Maintenance/System***.

3. Select ***Hardware/Device Manager***. If you know a better way on your system to get to the Device Manager then use that instead.

4. Select ***Ports (COM & LPT).***

5. If everything is working you will see an entry like that below. This is your receiver and X is the port:

AT89C5131 CDC USB to UART MGM (COMX)

3.4 Command Summaries

We hope that you will find the receiver interface friendly to use. The easiest way to get used to it is to use the JDA windows based software. Two applications are supplied with the receiver RECAPP.EXE which should be your normal program for operating the receivers when working with just the receiver, and VUSOFTNT.EXE which is a program that can operate all available JDA Systems hardware and software interfaces.

The following is only for more experienced users and should not be necessary when operating with the JDA Systems supplied software.

For the more experienced user then you may communicate with the receiver via the built in Windows Hyper Terminal program.

1. To do this select:

Start/All Programs/Accessories/Communications/HyperTerminal

2. Enter a name for the connection e.g. RF0.

3. Select ***Connect Using:*** and then ***COMX*** where X is selected to match the port setting for the receiver that you found earlier (**AT89C5131 CDC USB to UART MGM (COMX)**)

4. Hyper Terminal will ask you for the port settings, basically as the receiver uses only an emulation of a COM port then these can be set to any setting you like. It is quite normal simply to accept the default settings.

5. To confirm that everything has been setup well, and the receiver is now working correctly, hit the return key while the Hyper Terminal is active. The response should be:

>

6. Type **help** and then the return key.

The response should be:

help

Receiver v1.8

JDA Systems

www.jda-tele.com

help:

h - Help. Display this text.

kxx – Set the unique ID number

} – Read the unique firmware number

r - Display the firmware version

qx - Set Q tank filter to setting x. (0-3)

cx - Set channel filter to setting x. (0-3)

ax - Set AGC filter to setting x. (0-3)

vx - Set AGC filter to to setting x. (0-3)

sx - Set SRC to x. (0-1, 2 for diversity (Master only))

px - Set POL to x. (0-1)

zx - View video filter potentiometer (0-25)

bx - Set ACDC to x. (0-1)

nxx - Set pre damper to xx.

dxx - Set offset to xx.

exx - Set dev.meter gain to xx.

ixx - Set dev. out level to xx.

mx - Set post gain to x. (0-2)

lx - Set ADC input selection to x. (0-3)

o - Read ADC

1 - Toggle LED

gxyy - Set digital pot x to yy

jx - Set power on/off (1 - on, 0 - off)

fxxyyyyyyyy - store Video filter potentiometers(xx:05-25)

>xxc... - store name string for filter setting xx (00-25). Up to 8 characters.

tx - Store current setting to position x (1-5)

yx - Load setting from position x (1-5)

ux - Set default setting to position x (1-5, 0 for none)

***x - Display setting, position x (1-5)**

w - Display current settings

, - Display all Video filter settings

>

If you get the same results as above then your receiver is now working normally.

3.5 User Commands

To operate the receiver only a small number of the available commands are actually needed. Most of the commands are used only by the JDA compiled software and when testing the receiver during the JDA quality control.

You will always need to hit the return key after every command before that command is processed by the receiver.

The setup commands are:

1. kxx - Set the unique ID number

>k50

50

>

Enter k50 to set the unique ID number to 50. The unique ID number is used to identify the receiver to the controlling software and the default value for the first receiver is 50.

2. } – Read the unique firmware number

>}

50

>

Type } to return the unique ID number of the receiver.

3. r - Display the firmware version

>r

Receiver v1.8

>

Type r to return the receiver hardware version.

The commands you will need are:

1. qx - Sets Q tank filter to setting x. (0-3)

>q0

Q tank filter setting 00

>

Enter **q0** to select a Q tank of +/-2MHz and **p3** to select a Q tank of +/-10MHz. This is the phase detector in the receiver and ahould be set to be equivalent or greater to the input data rate required.

2. cx - Sets channel filter to setting x. (0-3)

>c0

Channel filter setting 00

>

Enter **c0** to set the pre-detect (or 2nd IF) filter to the first of its four available frequencies. The frequencies available will be defined by the customer's selection at the time of ordering the receiver.

e.g. c0 1MHz, c1 2MHz, c2 4Mhz, c3 10Mhz

3. ax - Sets AGC filter to setting x. (0-3)

> a0

AGC filter setting 00

>

Enter **a0** to set the AGC time constant to one of four values, a0 is Bypass, a1 is 1mSec, a2 is 19mSec and a3 is 100mSec.

4. vx - Sets video filter to setting x. (0-3)

> v0

Video filter setting 00

>

Enter **v0** to set the post-detect (or Video) filter to the first of its available frequencies. The frequencies available will be defined by the customer's selection at the time of ordering the receiver.

e.g. v0 Bypass, v1 5MHz, v2 PAL Deemphasis, v3 NTSC Deemphasis

5. m - reads RSSI calibration

>m

Read calibration: 0x76 0x26

>

The actual signal strength is measured internally using an ADC and the onboard CPU calculates the strength using an value/yy-xx calculation where yy and xx are stored in the local static memory. The **m** command read the yy and xx values of the internal memory and displays them in hex.

6. nxxyy - sets RSSI calibration to xx dBm(hex) and yy(hex) so that RSSI = value/yy - xx

>n7626

Write calibration: OK

>

The actual signal strength is measured internally using an ADC and the onboard CPU calculates the strength using an value/yy-xx calculation where yy and xx are stored in the

local static memory. The **nxxyy** command writes the yy and xx values to the internal memory as they are entered in hex.

7. dxx - Set digital potentiometer to xx. (0-0x7f)

>d40
Digital potentiometer setting 0x40

>
The output of the receiver may be adjusted to center the output signal at 0V. This fine adjustment is entered in hex from 0 to 7F,

8. exx - Set deviation potentiometer to xx. (0-0x7f)

>e40
Digital potentiometer setting 0x40

>
The deviation of the receiver may be adjusted. This adjustment is entered in hex from 0 to 7F.

9. sx - Set SRC to x. (0-1, 2 for diversity(Master only))

>s1
SRC setting 01

>

The input source for the receiver may be set to s0 external (normal for use with an external down converter), s1 internal, s2 for diversity combination (only to be used on the master unit of the two units whose outputs are to be combined.
For post detect combination:
a) Connect the receivers DIO-pins (J5, pin 4).
b) Connect the Video out or Video rec from the slave receiver to the video in on the master receiver.
c) The slave receiver shall have a jumper on J2.
d) The master receiver shall be given the command -s2.

10. px - Set POL to x. (0-1)

> p0
POL setting 00

>

Sets the output polarity, p0 is normal and p1 is inverted.

11. zx - Set DEEMPH to x. (0-1)

> z0
DEEMPH setting 00

>

This is only used in combination with the command v0. z0 switches off the video deemphasis leaving the post-detect (video) filter at the user selected level v0 5MHz. z1 switches on the video deemphasis to the video type selected when the receiver was ordered, either NTSC or PAL.

12. bx - Set ACDC to x. (0-1)

> b0
ACDC setting 00

>

Selecting b0 causes the receiver output to be DC coupled, selecting b1 selects AC coupling.

13. nx - Set pre gain to x. (0-3)

> n0
Pre gain setting 00

>

This command sets the pre-detect gain to one of the following values, n0 1, n1 1.7, n2 2.6, n3 5.2.

14. mx - Set post gain to x. (0-3)

> m0
Post gain setting 00

>

This command sets the post-detect gain to one of the following values, m0 1, m1 1.7, m2 2.6, m3 5.2.

15. lx - Set ADC input selection to x. (0-3)

> 0
ADC input selection 00

>

This command set the source for the internal ADC, I0 selects the AM level, I1 selects the received deviation, I2 selects the received signal strength, I3 is unused.

16. o - Read ADC

> o
ADC: 0x7fc

>

This command reads the internal ADC.

16. w - display current settings

> w
Current settings:
AGC filter: 00
Channel filter: 03
Q tank setting: 00
Post gain: 00
Polarity: 00
AC/DC: 00
AC/DC: 00
Source setting: 0
Video filter setting: VFX1

>

Displays the current receiver settings

3.6 Down Converter Command Summaries

We hope that you will find the down converter interface friendly to use. The easiest way to get used to it is to use the JDA windows based software.

For the more experienced user then you may communicate with the down converter via the built in Windows Hyper Terminal program.

1. To do this select:

Start/All Programs/Accessories/Communications/HyperTerminal

2. Enter a name for the connection e.g. RF0.

3. Select ***Connect Using:*** and then ***COMX*** where X is selected to match the port setting for the receiver that you found earlier (**AT89C5131 CDC USB to UART MGM (COMX)**)

4. Hyper Terminal will ask you for the port settings, basically as the down converter uses only an emulation of a COM port then these can be set to any setting you like. It is quite normal simply to accept the default settings.

5. To confirm that everything has been setup well, and the down converter is now working correctly, hit the return key while the Hyper Terminal is active. The response should be:

>

6. Type **help** and then the return key.

The response should be:

>help

Downconverter v2.0

JDA Systems

www.jda-tele.com

help:

kxx - Set the unique ID number

} - Read the unique ID number

s - shows current status and shiftregister values

r - resets shiftregisters to default value

exx - sets switches (shiftregister 1) to value xx

dxx - sets damper (shiftregister 2) to value xx, 0 - 1F (max damping)

px - sets shutwown (SHDN) bit to value x (0 -on, 1 -off)

l - reads LD input

axxxxxx - loads xxxxxx into ADF4219's shift register

ixx - sets ADF4219's IF to 310.xx MHz

fxxxxx - sets ADF4219's RF to xxxx.x MHz

cxxxxxx - sets frequency to xxxx.xx MHz (50 kHz resolution)

o - reads RSSI

m - reads RSSI calibration

nxxyy - sets RSSI calibration to xx dBm(hex) and yy(hex) so that RSSI = value/yy

- xx

x - reads RSSI (raw, direct from the ADC)

tx - Store current setting to position x (1-5)

yx - Load setting from position x (1-5)

ux - Set default setting to position x (1-5, 0 for none, 6 for input selection)

***x - Display setting, position x (1-5)**

zx - Set digital outputs to x (0-f). For rev 4.0 and later.

, - Display current setting

>

If you get the same results as above then your down converter is now working normally.

3.7 User Commands

To operate the receiver only a small number of the available commands are actually needed. Most of the commands are used only by the JDA compiled software and when testing the receiver during the JDA quality control.

You will always need to hit the return key after every command before that command is processed by the receiver.

The setup commands are:

1. kxx - Set the unique ID number

>k10

10

>

Enter k10 to set the unique ID number to 10. The unique ID number is used to identify the down converter to the controlling software and the default value for the first receiver is 10.

2. } – Read the unique firmware number

>}

10

>

Type } to return the unique ID number of the down converter.

The commands you will need are:

1. dxx - sets damper (shiftregister 2) to value xx, 0 - 1F (max damping)

>d00

damper:

1f

>

Enter **do0** to set the first stage damper to 0db of damping. The input may be damped between 00 and 31 db.

2. px - sets shutwown (SHDN) bit to value x (0 -on, 1 -off)

>p0

Shutdown: 00

>

Enter **p0** to set the power of the main receiver stage on. This should be done before sending any receiver hardware setup commands. The receiver is switched off with the command **p1**.

3. cxxxxxx - sets frequency to xxxx.xx MHz (50 kHz resolution)

> c225050

channel:

S band

RF:18704

IF: 310.10

>

Enter **c225050** to set the reception frequency to 2.2505 GHz